471A configurable

A powerful dust collector, excellent high vacuum for suction over long horizontal and vertical distance

This content is protected under copyright law, furnished for informational use only, and subject to change without notice. © Nederman Holding AB

471A configurable

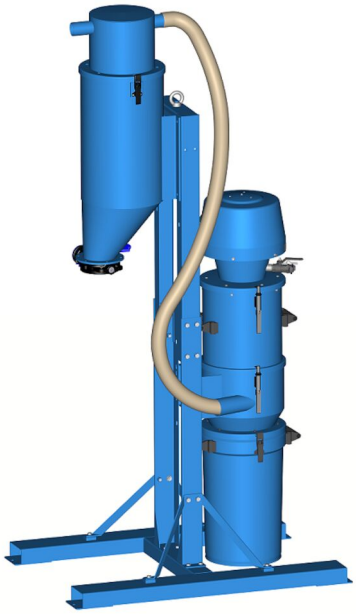

Nederman Pre-separation and Vacuum Transportation Systems pre-separate and discharge dust and granulated material during vacuuming and vacuum transport.
A system can handle dry material like cement, fertilizers, grit, sand, as well as wet material. Collected material can be discharged into tanks, containers, big-bags, on to conveyor belts, escalators etc.

The configuration of modules will be similar to 471A which are aimed for the toughest applications, for example handling a lot of abrasive and heavy material. The robustness of the unit and the power from the reliable ejector makes the unit very suitable for many applications where many industrial vacuum cleaners can not be used. For example to collect blasting material in blasting hall, sand recovery in foundries etc.

Your unit can be configured to meet your specific demands.
Different ejectors can be used depending on the demand but also the availability of compressed air. The ejector can be placed on a stationary silo with filter.
Nederman has a range of different discharge valves that can be fitted to the silo for easy discharge of the collected material.
If handling larger quantities of material and in order to make the material handling more effective Nederman recommends using a pre separator before the vacuum unit.The 471A is a complete unit including a pre separator.

To configure your 471A you may only choose modules listed in this document and with mfc (module for configuration) in title.
1. Select ejectormodule depending on required vacuum and air flow.
2. Select filtermodule depending on filter capacity.
3. Select silomodule depending on disposal option.
4. Select disposal option, container or discharge valve with plastic bag.
5. Select coarse grain separator.
6. Select silo.
7. Select discharge valve.
8. Select frame.
9. Select hose for connection between vaccum cleaner and separator.
10. Select cleaning equipment.

Choose how to control your butterfly valve:
1. Electric controlled
- You need a namur valve, solenoid valve recommended for the ejector size you choose and a suitable control box.
2. Air controlled
- You need a namur valve.
Hose for air supply to the namur valve is not supplied by Nederman.
Ensure you meet all requirements for your modules.

- Robust and efficient self-cleaning filter

This content is protected under copyright law, furnished for informational use only, and subject to change without notice. © Nederman Holding AB

471A configurable

- Very powerful and reliable ejector as vacuum producer
- Suitable for heavy and/or abrasive material
- Control system with many different functions is available as an accessory

Nom du produit	471A configurable
Méthode de décolmatage	[CompressedAir]
Surface filtrante (m²)	1,6
Compressed air requirement	7 bar et 3,0 Nm3/min
Max airflow (m³/h)	342 Nm3/h
Inlet	76 mm

This content is protected under copyright law, furnished for informational use only, and subject to change without notice. © Nederman Holding AB

471A configurable

[image]	Nom de la fiche technique	olume sonore (dB(A))	Max vaccum (kPa)	Poids (kg)	[model]
	NE52, Ejectormodule with S50 lid and 2 quick coupling	75,5	-52	13	43051004
	NE64, Ejectormodule with S50 lid and 2 quick coupling	77	-68	13	43051005
	NE74, Ejectormodule with S50 lid and 2 quick coupling	75	-78	13	43051006
	Silo S50 with plastic fasteners, inlet ø76, for container			12	43420026
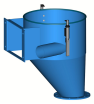	Silo S50 with plastic fasteners, inlet ø76, for discharge valve			12	43420027
	Adjustable frame with bottom for S200 system and stand for S50 system			55	43751039*
	Adjustable frame with bottom for S50 system and stand for S50 system			50	43751040**

**Fits blastpots up to 680mm width. Max height 2,3m.*
***Fits blastpots up to 560mm width. Max height 2,3m.*

This content is protected under copyright law, furnished for informational use only, and subject to change without notice. © Nederman Holding AB

471A configurable

[accessory]		[partno]
	Kit vanne de décharge Linatex d100 avec réducteur pour bride	43630300
	Indicateur de niveau poubelle (BLI) EX	40375269
	Manchon raccord 65	40377028

This content is protected under copyright law, furnished for informational use only, and subject to change without notice. © Nederman Holding AB

471A configurable

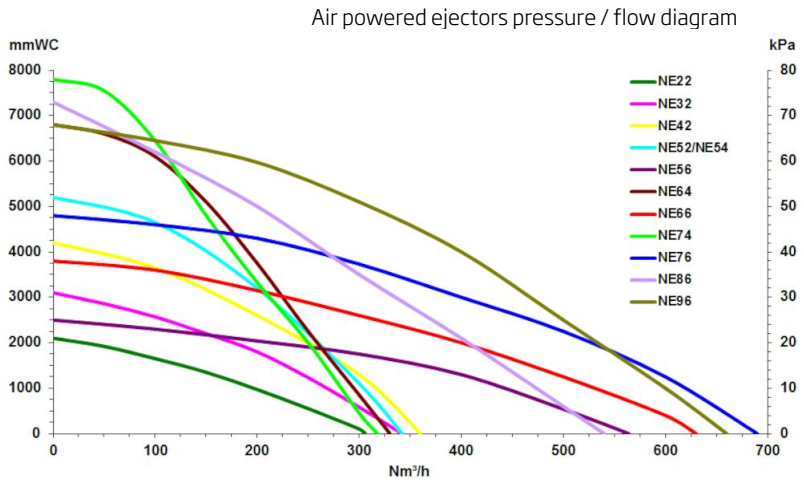

Air Powered ejectors

All performance data are based on 7 bar supply pressure

Ejector/Hose dimension	ø51mm	ø63mm	ø76mm
NE52	2	N/A	N/A
NE64	2	2,4	N/A
NE74	2,3	2,7	N/A
NE76	1,7	2,7	3,6
NE96	2,6	3,6	4,9

Capacity (tonne/hour) with Blasting media 2,4kg/liter and 20m hose

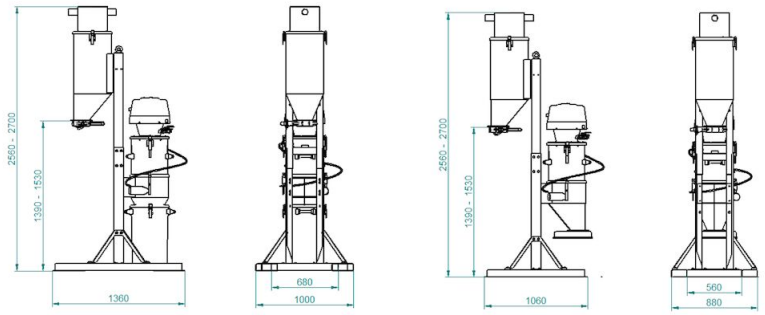

The height of your configuration is depending on which modules you choose

This content is protected under copyright law, furnished for informational use only, and subject to change without notice. © Nederman Holding AB