# NCF-vifter

Nederman NCF-viftene har direkte drivmotorer som betyr en sikker og kostnadseffektiv drift. Å installere en energieffektiv NCF-vifte med våre andre Nederman-produkter sparer tid og reduserer energikostnader. Det er en radialvifte beregnet for bruk i alle typer av industrielle prosesser og ventilasjon – montert innendørs og utendørs. Viften er utstyrt med vibrasjonsdempere som standard.

| | |
|---|---|
| Produktnavn | NCF-vifter |
| Beskyttelsesklasse: | IP 55 |
| Installasjon | Utendørs, Innendørs |
| Materiale | Sheet metal, painted grey, RAL 7045 |
| Ambient temperature range | -30 to +40 °C (22 F to 104 F) |
| Driftstemperatur | Max. 60 °C |
| Frekvens Hz | 50 |
| Antall faser | 3 |

This content is protected under copyright law, furnished for informational use only, and subject to change without notice. © Nederman Holding AB

# NCF-vifter

| Bilde | Navn på datablad | Spenning (V) | Strømstyrke (A) | Noise level (dB(A)) | Vekt (kg) | Kraft (kW) | Model |
|---|---|---|---|---|---|---|---|
| | VIFTE NCF120/15 | 230/400 | 24,0/13,8 | 85 db(A) at 10000 m³/h | 123 | 7,5 | 14550228 |
| | VIFTE NCF30/15 | 230/400 | 7,9 / 4,6 | 69 db(A) at 2500 m³/h | 67 | 2,2 | 14550128 |
| | VIFTE NCF30/25 | 230/400 | 13,6/7,8 | 74 db(A) at 4000 m³/h | 105 | 4 | 14550328 |
| | VIFTE NCF40/25 | 230/400 | 17,9/10,3 | 75 db(A) at 4000 m³/h | 110 | 5,5 | 14550428 |
| | VIFTE NCF50/25 | 230/400 | 17,9/10,3 | 78 db(A) at 3500 m³/h | 112 | 5,5 | 14550528 |
| | VIFTE NCF80/20 | 230/400 | 24,0/13,8 | 77 db(A) at 6000 m³/h | 150 | 7,5 | 14550628 |
| | VIFTE NCF120/25 | 230/400 | 46,1/26,5 | 82 db(A) at 8000 m³/h | 232 | 15 | 14550728 |
| | VIFTE NCF160/25 | 230/400 | 56,5/32,5 | 84 db(A) at 10000 m³/h | 292 | 18,5 | 14550828 |
| | VIFTE NCF120/15 | 400/690 | 13,8/8,0 | 85 db(A) at 10000 m³/h | 123 | 7,5 | 14550928 |
| | VIFTE NCF30/25 | 400/690 | 7,8/4,5 | 74 db(A) at 4000 m³/h | 105 | 4 | 14551028 |
| | VIFTE NCF40/25 | 400/690 | 10,3/6,0 | 75 db(A) at 4000 m³/h | 110 | 5,5 | 14551128 |
| | VIFTE NCF50/25 | 400/690 | 10,3/6,0 | 78 db(A) at 3500 m³/h | 112 | 5,5 | 14551228 |
| | VIFTE NCF80/20 | 400/690 | 13,8/8,0 | 77 db(A) at 6000 m³/h | 150 | 7,5 | 14551328 |
| | VIFTE NCF120/25 | 400/690 | 26,5/15,3 | 82 db(A) at 8000 m³/h | 232 | 15 | 14551428 |
| | VIFTE NCF160/25 | 400/690 | 32,5/18,8 | 84 db(A) at 10000 m³/h | 292 | 18,5 | 14551528 |

This content is protected under copyright law, furnished for informational use only, and subject to change without notice. © Nederman Holding AB

# NCF-vifter

| | Tilbehør | Artikkelnummer |
|---|---|---|
| | Innløpsadap.. d250,30/15,40/25,50/25 | 14374438 |
| | Innløpsadapter d315,30/25 | 14374439 |
| | Innløpsadapter d400,80/20,120/25 | 14374440 |
| | Innløpsadapter d500,120/15,160/25 | 14374441 |
| 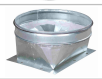 | Utl.adap..288x205 d315,30/15,40/25 | 14374442 |
| 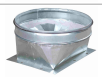 | Utløpsadapter 322x229 d400,30/25 | 14374443 |
| | Utl.adap..361x256 d400,80/20,120/25 | 14374444 |
| | Utl.adap..453x322d500,120/15,160/25 | 14374445 |
| 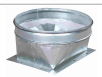 | Utl.adap..256x183 d250,50/25,30/20 | 14374446 |
| | Fleks.inl.ad.d250,30/15,40/25,50/25 | 14374447 |
| | Fleksibel innløpsadapter d315,30/25 | 14374448 |
| | Fleks.innløp.adap.d400,80/20,120/25 | 14374449 |
| | Fleks.innløp.adap.d500,120/15,160/25 | 14374450 |
| | Fleks. utl.a.288x205 d315,30/15,40/25 | 14374451 |
| | Fleks.utløpsadap.322x229 d400,30/25 | 14374452 |
| | Fleks. utl.a.361x256d400,80/20,120/25 | 14374453 |
| | Fleks. utl.a.453x322d500,120/15,160/25 | 14374454 |
| | Fleks. utl.a.256x183 d250,50/25,30/20 | 14374455 |
| | Innløpsgitter d250,30/15,40/25,50/25 | 14374456 |
| | Vernegitter innløp d315,30/25 | 14374457 |
| | Vernegitter innløp d400,80/20,120/25 | 14374458 |
| | Vernegitter innløp d500,120/15,160/25 | 14374459 |

This content is protected under copyright law, furnished for informational use only, and subject to change without notice. © Nederman Holding AB

# NCF-vifter

| | Tilbehør | Artikkelnummer |
|---|---|---|
| | Vernegitter utløp,30/15,40/25 | 14374460 |
| | Vernegitter utløp,30/25 | 14374461 |
| | Vernegitter utløp,80/20,120/25 | 14374462 |
| | Vernegitter utløp,120/15,160/25 | 14374463 |
| | Vernegitter utløp,50/25 | 14374464 |
| | Vibrasjonsdemper AM 30,1 sett | 14374628 |
| | Vibrasjonsdemper AM 25,1 sett | 14374629 |
| | Vibrasjonsdemper AM 50,1 sett | 14374630 |
| | Innløpsadapter d250,30/20 | 14375076 |
| | Fan starter 5.5kW (2,2 - 5,5 kW motor power) | 14514837 |
| | Fan starter 11kW (4,0 - 11,0 kW motor power) | 14514937 |
| | Fan starter 18.5kW (15,0 - 18,5 kW motor power) | 14515037 |
| | Fan starter 22kW (18,5 - 22,0 kW motor power) | 14515537 |
| | Frekvensomformer for 5,5 kW motorkraft | 14522037* |
| | Frekvensomformer for 7,5 kW motorkraft | 14522137** |
| | Frekvensomformer for 11 kW motorkraft | 14522237** |
| | Frekvensomformer for 15 kW motorkraft | 14522637** |
| | Frekvensomformer for 18,5 kW motorkraft | 14525137** |
| | Frekvensomformer for 22 kW motorkraft | 14525237** |

**Trykksensor 2000 Pa*
***Trykksensor 5000 Pa*

This content is protected under copyright law, furnished for informational use only, and subject to change without notice. © Nederman Holding AB

# NCF-vifter

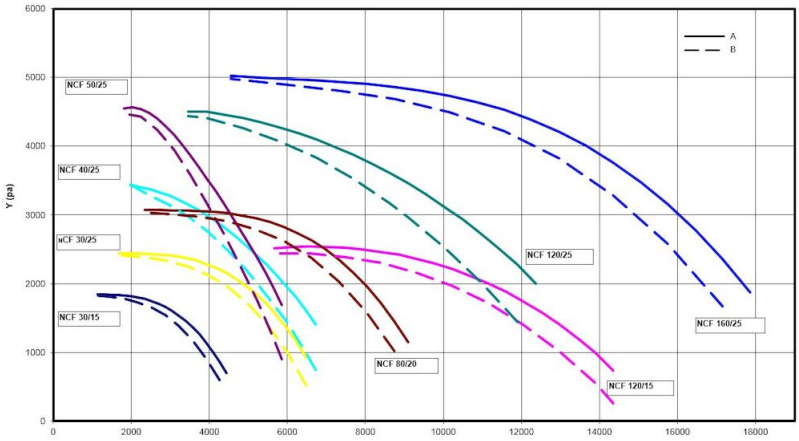


Y = Pressure drop

X = Air flow

A = Total pressure

B = Static pressure

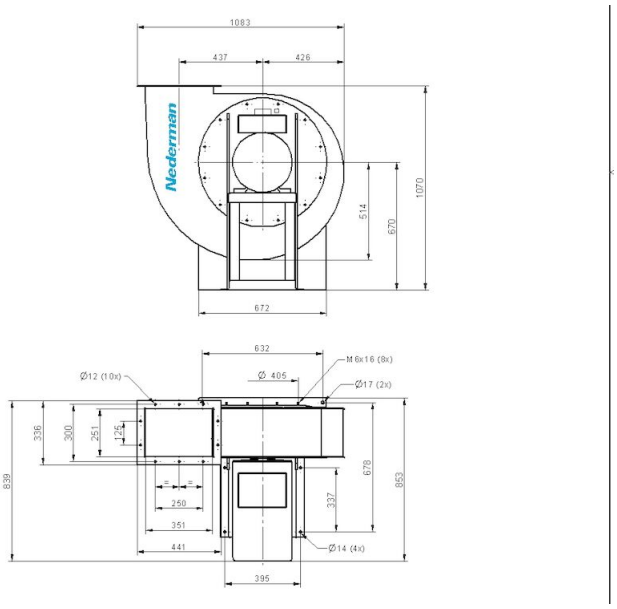


Fan NCF 120/25

Duct inlet diameter 400 mm

Duct outlet diameter 400 mm

This content is protected under copyright law, furnished for informational use only, and subject to change without notice. © Nederman Holding AB

# NCF-vifter

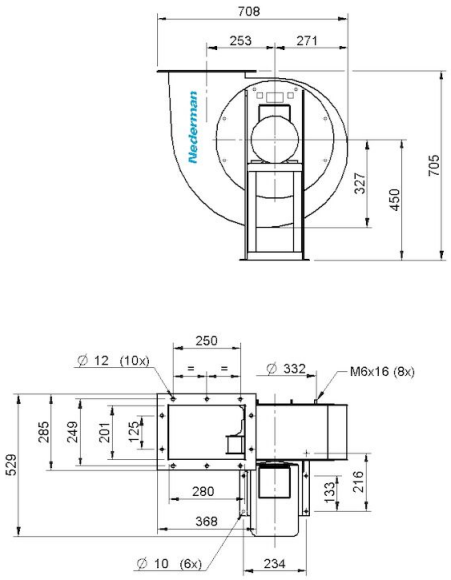


NCF 30/15

Duct inlet diameter 250 mm

Duct outlet diameter 315 mm

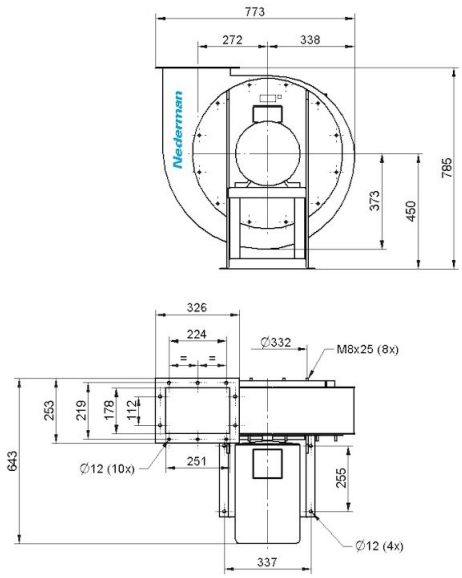


NCF 50/25

Duct inlet diameter 250 mm

Duct outlet diameter 250 mm

This content is protected under copyright law, furnished for informational use only, and subject to change without notice. © Nederman Holding AB

# NCF-vifter

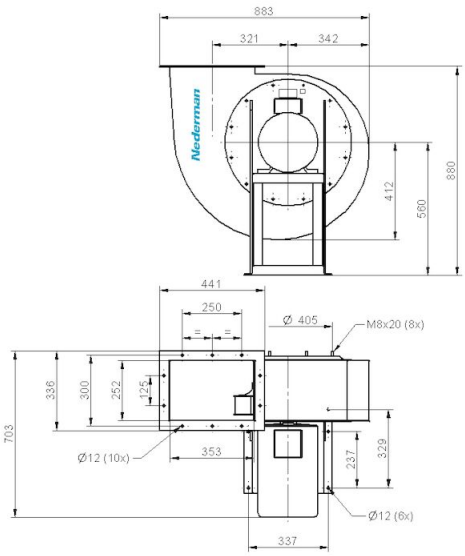


NCF 80/20

Duct inlet diameter 400 mm

Duct outlet diameter 400 mm

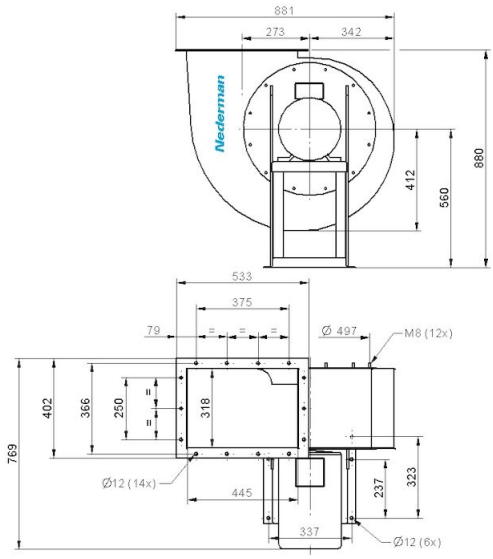


NCF 120/15

Duct inlet diameter 500 mm

Duct outlet diameter 500 mm

This content is protected under copyright law, furnished for informational use only, and subject to change without notice. © Nederman Holding AB

# NCF-vifter

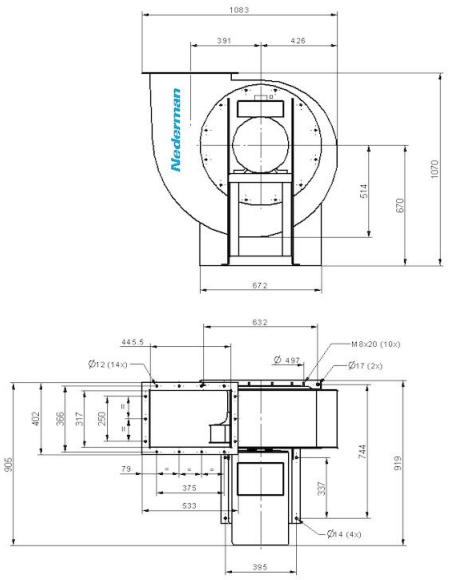


NCF 160/25

Duct inlet diameter 500 mm

Duct outlet diameter 500 mm

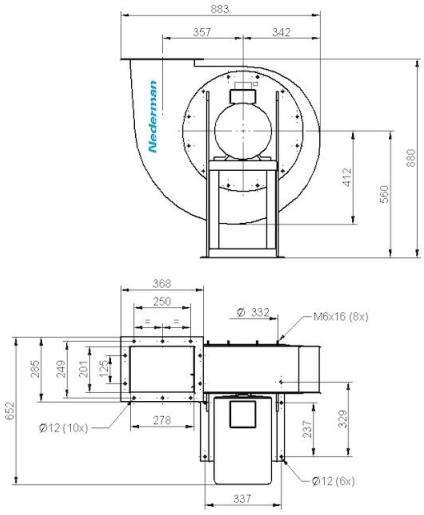


NCF 40/25

Duct inlet diameter 250 mm

Duct outlet diameter 315 mm

This content is protected under copyright law, furnished for informational use only, and subject to change without notice. © Nederman Holding AB

# NCF-vifter

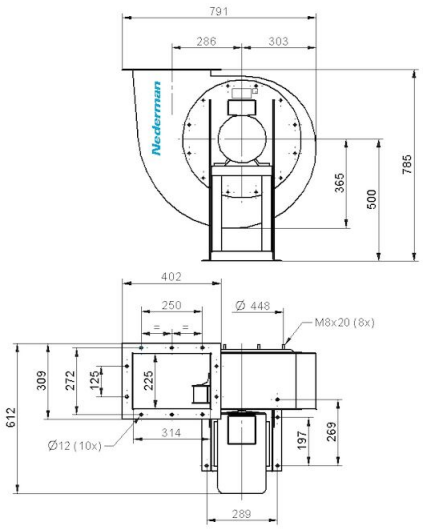


NCF 30/25

Duct inlet diameter 315 mm

Duct outlet diameter 400 mm

This content is protected under copyright law, furnished for informational use only, and subject to change without notice. © Nederman Holding AB