QF-Reduzierung

QF-Reduzierungen für Rohrleitungen

Produktname	QF-Reduzierung
Verkaufsbereich	Europe (non UK), UK, Thailand (Asia), Japan, Australia
Include in Tech Data Sheet	True
Material	Galv
Ende Typ A	QF
Ende Typ B	QF

This content is protected under copyright law, furnished for informational use only, and subject to change without notice. © Nederman Holding AB

QF-Reduzierung

Bild	Artikelname	Legacy Item No.	Material Thickness	Durchmesser A	Durchmesser B	Innenmaß (ID)	Außenmaß (OD)	Rollkante (mm)	Gewicht	Modell
	Reducer Galv 0,7mm 100QF 80QF	QR100080	0,7mm	100	80	78	79	6	0,33	8240000309
	Reducer Galv 0,7mm 125QF 80QF	QR125080	0,7mm	125	80	123	124	6	0,42	8240000310
	Reducer Galv 0,7mm 125QF 100QF	QR125100	0,7mm	125	100	123	124	6	0,42	8240000311
	Reducer Galv 0,7mm 140QF 80QF	QR140080	0,7mm	140	80	138	139	6	0,48	8240000312
	Reducer Galv 0,7mm 140QF 100QF	QR140100	0,7mm	140	100				0,48	8240000313
	Reducer Galv 0,7mm 140QF 125QF	QR140125	0,7mm	140	125	138	139	6	0,47	8240000314
	Reducer Galv 0,7mm 150QF 80QF	QR150080	0,7mm	150	80	147	148	6	0,53	8240000315
	Reducer Galv 0,7mm 150QF 100QF	QR150100	0,7mm	150	100				0,52	8240000316
	Reducer Galv 0,7mm 150QF 125QF	QR150125	0,7mm	150	125				0,51	8240000317
	Reducer Galv 0,7mm 150QF 140QF	QR150140	0,7mm	150	140	148	147	6	0,5	8240000318
	Reducer Galv 0,7mm 160QF 80QF	QR160080	0,7mm	160	80	158	159	6	0,57	8240000319
	Reducer Galv 0,7mm 160QF 100QF	QR160100	0,7mm	160	100				0,57	8240000320
	Reducer Galv 0,7mm 160QF 125QF	QR160125	0,7mm	160	125				0,56	8240000321
	Reducer Galv 0,7mm 160QF 140QF	QR160140	0,7mm	160	140				0,54	8240000322
	Reducer Galv 0,7mm 160QF 150QF	QR160150	0,7mm	160	150	158	159	6	0,53	8240000323

This content is protected under copyright law, furnished for informational use only, and subject to change without notice. © Nederman Holding AB

QF-Reduzierung

Bild	Artikelname	Legacy Item No.	Material Thickness	Durchmesser A	Durchmesser B	Innenmaß (ID)	Außenmaß (OD)	Rollkante (mm)	Gewicht	Modell
	Reducer Galv 0,7mm 180QF 80QF	QR180080	0,7mm	180	80	178	179	8	0,68	8240000324
	Reducer Galv 0,7mm 180QF 100QF	QR180100	0,7mm	180	100				0,68	8240000325
	Reducer Galv 0,7mm 180QF 125QF	QR180125	0,7mm	180	125				0,67	8240000326
	Reducer Galv 0,7mm 180QF 140QF	QR180140	0,7mm	180	140				0,65	8240000327
	Reducer Galv 0,7mm 180QF 150QF	QR180150	0,7mm	180	150				0,64	8240000328
	Reducer Galv 0,7mm 180QF 160QF	QR180160	0,7mm	180	160	178	179	8	0,63	8240000329
	Reducer Galv 0,7mm 200QF 80QF	QR200080	0,7mm	200	80	199	200	8	0,79	8240000330
	Reducer Galv 0,7mm 200QF 100QF	QR200100	0,7mm	200	100				0,79	8240000331
	Reducer Galv 0,7mm 200QF 125QF	QR200125	0,7mm	200	125				0,77	8240000332
	Reducer Galv 0,7mm 200QF 140QF	QR200140	0,7mm	200	140				0,76	8240000333
	Reducer Galv 0,7mm 200QF 150QF	QR200150	0,7mm	200	150				0,75	8240000334
	Reducer Galv 0,7mm 200QF 160QF	QR200160	0,7mm	200	160				0,73	8240000335
	Reducer Galv 0,7mm 200QF 180QF	QR200180	0,7mm	200	180	199	200	8	0,72	8240000336
	Reducer Galv 0,7mm 224QF 100QF	QR224100	0,7mm	224	100				0,92	8240000338
	Reducer Galv 0,7mm 224QF 125QF	QR224125	0,7mm	224	125				0,91	8240000339

This content is protected under copyright law, furnished for informational use only, and subject to change without notice. © Nederman Holding AB

QF-Reduzierung

Bild	Artikelname	Legacy Item No.	Material Thickness	Durchmesser A	Durchmesser B	Innenmaß (ID)	Außenmaß (OD)	Rollkante (mm)	Gewicht	Modell
	Reducer Galv 0,7mm 224QF 140QF	QR224140	0,7mm	224	140				0,89	8240000340
	Reducer Galv 0,7mm 224QF 150QF	QR224150	0,7mm	224	150				0,88	8240000341
	Reducer Galv 0,7mm 224QF 160QF	QR224160	0,7mm	224	160				0,87	8240000342
	Reducer Galv 0,7mm 224QF 180QF	QR224180	0,7mm	224	180				0,85	8240000343
	Reducer Galv 0,7mm 224QF 200QF	QR224200	0,7mm	224	200	223	224	8	0,82	8240000344
	Reducer Galv 0,7mm 250QF 80QF	QR250080	0,7mm	250	80	249	250	8	1,09	8240000345
	Reducer Galv 0,7mm 250QF 100QF	QR250100	0,7mm	250	100				1,08	8240000346
	Reducer Galv 0,7mm 250QF 125QF	QR250125	0,7mm	250	125				1,07	8240000347
	Reducer Galv 0,7mm 250QF 140QF	QR250140	0,7mm	250	140				1,06	8240000348
	Reducer Galv 0,7mm 250QF 150QF	QR250150	0,7mm	250	150				1,04	8240000349
	Reducer Galv 0,7mm 250QF 160QF	QR250160	0,7mm	250	160				1,03	8240000350
	Reducer Galv 0,7mm 250QF 180QF	QR250180	0,7mm	250	180				1,01	8240000351
	Reducer Galv 0,7mm 250QF 200QF	QR250200	0,7mm	250	200				0,97	8240000352
	Reducer Galv 0,7mm 250QF 224QF	QR250224	0,7mm	250	224	249	250	8	0,92	8240000353
	Reducer Galv 0,7mm 300QF 140QF	QR300140	0,7mm	300	140				1,4	8240000357

This content is protected under copyright law, furnished for informational use only, and subject to change without notice. © Nederman Holding AB

QF-Reduzierung

Bild	Artikelname	Legacy Item No.	Material Thickness	Durchmesser A	Durchmesser B	Innenmaß (ID)	Außenmaß (OD)	Rollkante (mm)	Gewicht	Modell
	Reducer Galv 0,7mm 300QF 150QF	QR300150	0,7mm	300	150				1,4	8240000358
	Reducer Galv 0,7mm 300QF 160QF	QR300160	0,7mm	300	160				1,38	8240000359
	Reducer Galv 0,7mm 300QF 180QF	QR300180	0,7mm	300	180				1,37	8240000360
	Reducer Galv 0,7mm 300QF 200QF	QR300200	0,7mm	300	200				1,33	8240000361
	Reducer Galv 0,7mm 300QF 224QF	QR300224	0,7mm	300	224				1,27	8240000362
	Reducer Galv 0,7mm 300QF 250QF	QR300250	0,7mm	300	250	297	298	10	1,2	8240000363
	Reducer Galv 0,7mm 315QF 100QF	QR315100	0,7mm	315	100	312	313	10	1,58	8240000364
	Reducer Galv 0,7mm 315QF 125QF	QR315125	0,7mm	315	125				1,56	8240000365
	Reducer Galv 0,7mm 315QF 140QF	QR315140	0,7mm	315	140				1,55	8240000366
	Reducer Galv 0,7mm 315QF 150QF	QR315150	0,7mm	315	150				1,54	8240000367
	Reducer Galv 0,7mm 315QF 160QF	QR315160	0,7mm	315	160				1,52	8240000368
	Reducer Galv 0,7mm 315QF 180QF	QR315180	0,7mm	315	180				1,5	8240000369
	Reducer Galv 0,7mm 315QF 200QF	QR315200	0,7mm	315	200				1,46	8240000370
	Reducer Galv 0,7mm 315QF 224QF	QR315224	0,7mm	315	224				1,41	8240000371
	Reducer Galv 0,7mm 315QF 250QF	QR315250	0,7mm	315	250				1,33	8240000372

This content is protected under copyright law, furnished for informational use only, and subject to change without notice. © Nederman Holding AB

QF-Reduzierung

Bild	Artikelname	Legacy Item No.	Material Thickness	Durchmesser A	Durchmesser B	Innenmaß (ID)	Außenmaß (OD)	Rollkante (mm)	Gewicht	Modell
	Reducer Galv 0,7mm 315QF 300QF	QR315300	0,7mm	315	300	312	313	10	1,16	8240000373
	Reducer Galv 0,7mm 350QF 125QF	QR350125	0,7mm	350	125	348	348	10	1,85	8240000374
	Reducer Galv 0,7mm 350QF 140QF	QR350140	0,7mm	350	140				1,83	8240000375
	Reducer Galv 0,7mm 350QF 160QF	QR350160	0,7mm	350	160				1,81	8240000377
	Reducer Galv 0,7mm 350QF 180QF	QR350180	0,7mm	350	180				1,79	8240000378
	Reducer Galv 0,7mm 350QF 200QF	QR350200	0,7mm	350	200				1,75	8240000379
	Reducer Galv 0,7mm 350QF 224QF	QR350224	0,7mm	350	224				1,69	8240000380
	Reducer Galv 0,7mm 350QF 250QF	QR350250	0,7mm	350	250				1,62	8240000381
	Reducer Galv 0,7mm 350QF 300QF	QR350300	0,7mm	350	300				1,44	8240000382
	Reducer Galv 0,7mm 350QF 315QF	QR350315	0,7mm	350	315	312	313	10	1,4	8240000383
	Reducer Galv 0,9mm 400QF 140QF	QR400140	0,9mm	400	140	398	400	10	2,92	8240000384
	Reducer Galv 0,9mm 400QF 160QF	QR400160	0,9mm	400	160				2,88	8240000386
	Reducer Galv 0,9mm 400QF 180QF	QR400180	0,9mm	400	180				2,86	8240000387
	Reducer Galv 0,9mm 400QF 200QF	QR400200	0,9mm	400	200				2,81	8240000388
	Reducer Galv 0,9mm 400QF 224QF	QR400224	0,9mm	400	224				2,73	8240000389

This content is protected under copyright law, furnished for informational use only, and subject to change without notice. © Nederman Holding AB

QF-Reduzierung

Bild	Artikelname	Legacy Item No.	Material Thickness	Durchmesser A	Durchmesser B	Innenmaß (ID)	Außenmaß (OD)	Rollkante (mm)	Gewicht	Modell
	Reducer Galv 0,9mm 400QF 250QF	QR400250	0,9mm	400	250				2,64	8240000390
	Reducer Galv 0,9mm 400QF 300QF	QR400300	0,9mm	400	300				2,41	8240000391
	Reducer Galv 0,9mm 400QF 315QF	QR400315	0,9mm	400	315				2,36	8240000392
	Reducer Galv 0,9mm 400QF 350QF	QR400350	0,9mm	400	350	398	400	10	2,15	8240000393
	Reducer Galv 0,9mm 450QF 160QF	QR450160	0,9mm	450	160				3,52	8240000395
	Reducer Galv 0,9mm 450QF 180QF	QR450180	0,9mm	450	180				3,5	8240000396
	Reducer Galv 0,9mm 450QF 200QF	QR450200	0,9mm	450	200				3,44	8240000397
	Reducer Galv 0,9mm 450QF 224QF	QR450224	0,9mm	450	224				3,37	8240000398
	Reducer Galv 0,9mm 450QF 250QF	QR450250	0,9mm	450	250				3,27	8240000399
	Reducer Galv 0,9mm 450QF 300QF	QR450300	0,9mm	450	300				3,04	8240000400
	Reducer Galv 0,9mm 450QF 315QF	QR450315	0,9mm	450	315				2,99	8240000401
	Reducer Galv 0,9mm 450QF 350QF	QR450350	0,9mm	450	350				2,78	8240000402
	Reducer Galv 0,9mm 450QF 400QF	QR450400	0,9mm	450	400	447	449	10	2,44	8240000403
	Reducer Galv 0,9mm 500QF 160QF	QR500160	0,9mm	500	160	497	499	10	4,22	8240000404
	Reducer Galv 0,9mm 500QF 180QF	QR500180	0,9mm	500	180				4,19	8240000405

This content is protected under copyright law, furnished for informational use only, and subject to change without notice. © Nederman Holding AB

QF-Reduzierung

Bild	Artikelname	Legacy Item No.	Material Thickness	Durchmesser A	Durchmesser B	Innenmaß (ID)	Außenmaß (OD)	Rollkante (mm)	Gewicht	Modell
	Reducer Galv 0,9mm 500QF 200QF	QR500200	0,9mm	500	200				4,14	8240000406
	Reducer Galv 0,9mm 500QF 224QF	QR500224	0,9mm	500	224				4,07	8240000407
	Reducer Galv 0,9mm 500QF 250QF	QR500250	0,9mm	500	250				3,97	8240000408
	Reducer Galv 0,9mm 500QF 300QF	QR500300	0,9mm	500	300				3,74	8240000409
	Reducer Galv 0,9mm 500QF 315QF	QR500315	0,9mm	500	315				3,69	8240000410
	Reducer Galv 0,9mm 500QF 350QF	QR500350	0,9mm	500	350				3,48	8240000411
	Reducer Galv 0,9mm 500QF 400QF	QR500400	0,9mm	500	400				3,13	8240000412
	Reducer Galv 0,9mm 500QF 450QF	QR500450	0,9mm	500	450	497	499	10	2,72	8240000413
	Reducer Galv 0,9mm 560QF 250QF	QR560250	0,9mm	560	250				4,89	8240000417
	Reducer Galv 0,9mm 560QF 300QF	QR560300	0,9mm	560	300				4,66	8240000418
	Reducer Galv 0,9mm 560QF 315QF	QR560315	0,9mm	560	315				4,61	8240000419
	Reducer Galv 0,9mm 560QF 350QF	QR560350	0,9mm	560	350				4,4	8240000420
	Reducer Galv 0,9mm 560QF 400QF	QR560400	0,9mm	560	400				4,05	8240000421
	Reducer Galv 0,9mm 560QF 450QF	QR560450	0,9mm	560	450				3,63	8240000422
	Reducer Galv 0,9mm 560QF 500QF	QR560500	0,9mm	560	500	557	559	10	3,17	8240000423

This content is protected under copyright law, furnished for informational use only, and subject to change without notice. © Nederman Holding AB

QF-Reduzierung

Bild	Artikelname	Legacy Item No.	Material Thickness	Durchmesser A	Durchmesser B	Innenmaß (ID)	Außenmaß (OD)	Rollkante (mm)	Gewicht	Modell
	Reducer Galv 0,9mm 630QF 300QF	QR630300	0,9mm	630	300				5,84	8240000427
	Reducer Galv 0,9mm 630QF 315QF	QR630315	0,9mm	630	315				5,79	8240000428
	Reducer Galv 0,9mm 630QF 350QF	QR630350	0,9mm	630	350				5,58	8240000429
	Reducer Galv 0,9mm 630QF 400QF	QR630400	0,9mm	630	400				5,23	8240000430
	Reducer Galv 0,9mm 630QF 450QF	QR630450	0,9mm	630	450				4,82	8240000431
	Reducer Galv 0,9mm 630QF 500QF	QR630500	0,9mm	630	500				4,34	8240000432
	Reducer Galv 0,9mm 630QF 560QF	QR630560	0,9mm	630	560	627	629	10	3,7	8240000433
	Reducer Galv 0,9mm 710QF 315QF	QR710315	0,9mm	710	315				7,29	8240000437
	Reducer Galv 0,9mm 710QF 350QF	QR710350	0,9mm	710	350				7,08	8240000438
	Reducer Galv 0,9mm 710QF 400QF	QR710400	0,9mm	710	400				6,73	8240000439
	Reducer Galv 0,9mm 710QF 450QF	QR710450	0,9mm	710	450				6,32	8240000440
	Reducer Galv 0,9mm 710QF 500QF	QR710500	0,9mm	710	500				5,84	8240000441
	Reducer Galv 0,9mm 710QF 560QF	QR710560	0,9mm	710	560				5,19	8240000442
	Reducer Galv 0,9mm 710QF 630QF	QR710630	0,9mm	710	630	707	709	10	4,32	8240000443
			0,7mm	315	80				1,57	8240009305

This content is protected under copyright law, furnished for informational use only, and subject to change without notice. © Nederman Holding AB

QF-Reduzierung

Bild	Artikelname	Legacy Item No.	Material Thickness	Durchmesser A	Durchmesser B	Innenmaß (ID)	Außenmaß (OD)	Rollkante (mm)	Gewicht	Modell
			0,7mm	350	80				1,86	8240009306
			0,9mm	400	80				2,95	8240009308
			0,9mm	400	100				2,95	8240009309
			0,9mm	400	125				2,93	8240009310
			0,9mm	450	80				3,59	8240009311
			0,9mm	450	100				3,58	8240009312
			0,9mm	450	140				3,55	8240009314
			0,9mm	630	160				6,32	8240009331

This content is protected under copyright law, furnished for informational use only, and subject to change without notice. © Nederman Holding AB

QF-Reduzierung

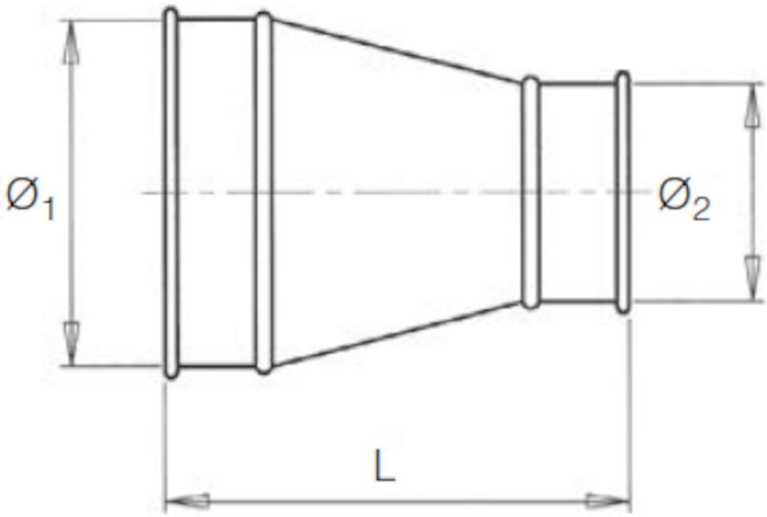

L = (Ø1 - Ø2) + 166mm

This content is protected under copyright law, furnished for informational use only, and subject to change without notice. © Nederman Holding AB